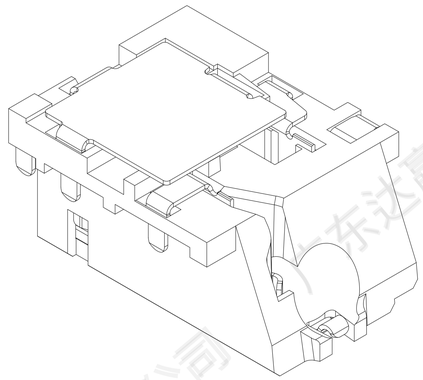

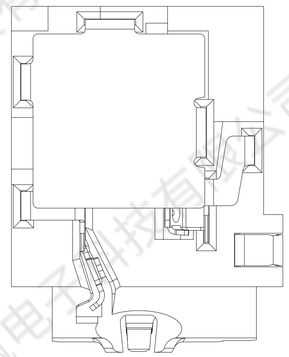

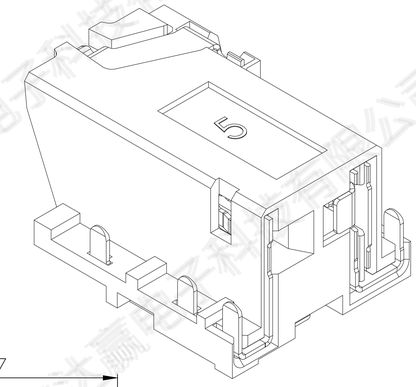

MODEL NO.:
PJ-D3265A-A BK7 AS02 L-RH
(1) (2) (3) (4) (5) (6)

(1) Series no.
(2) Schematic type: A
(3) Housing material and color:
BK7=PA10T(black)
(4) Terminal plating:
AS02=1#~4#Gold flash on contact area, Plate Matte tin on solder tail; 5#,6# Silver plating.
(5) Packing mode: L=Reel packing
(6) Environmental requirements:
RH=RoHS & Halogen Free

SPECIFICATION:
1.Electrical characteristics
1.1.Current rating: DC 0.5A max.
1.2: Voltage rating: DC 30V.
1.3: Contact resistance: ≤50mΩ(Initial)
After test: ≤100mΩ
1.4.Insulation resistance:
100MΩ min. at 500V DC.
1.5.Withstanding voltage:
500V AC for 1 minute.
2.Mechanical characteristics
2.1.Life test: 5000 cycles min,
2.2.Mating force: 3~30N,
Unmating force: 3~30N.
3.Temperature range: -40 'C-+80 'C

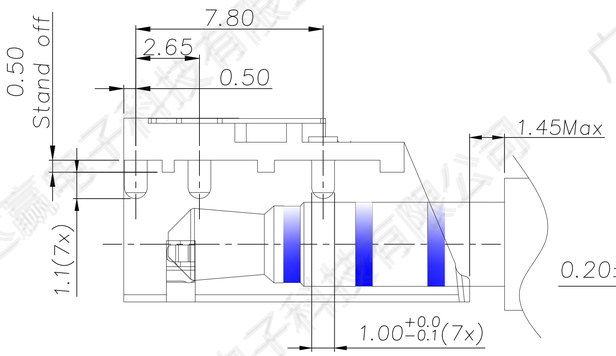

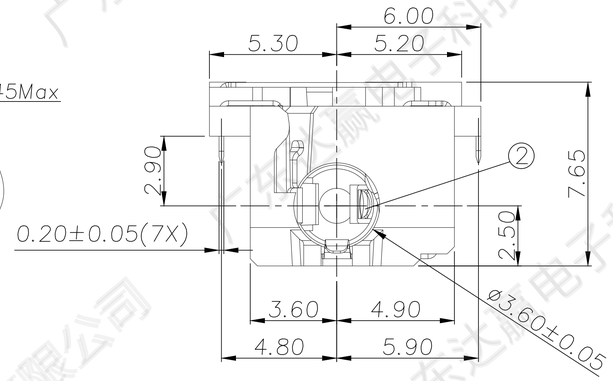

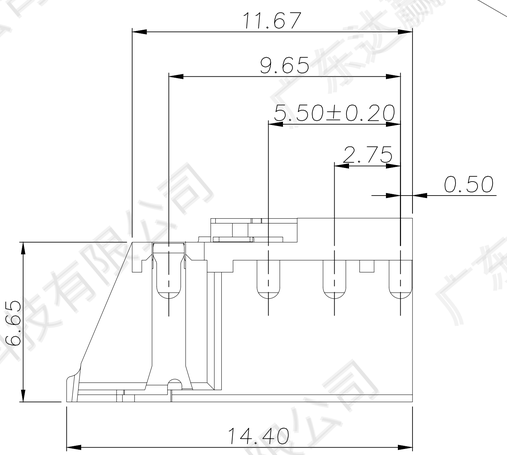

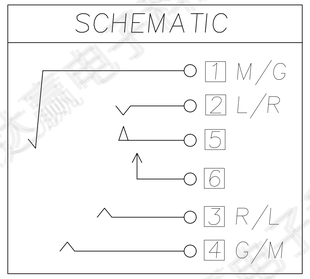

1 : Terminal No.
① : Project No.

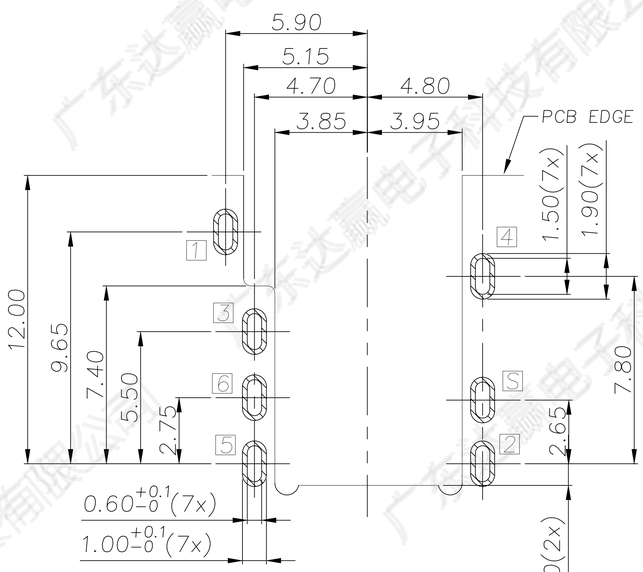

RECOMMENDED P.C.B LAYOUT
TOP VIEW (TOLRANCE: ±0.05)

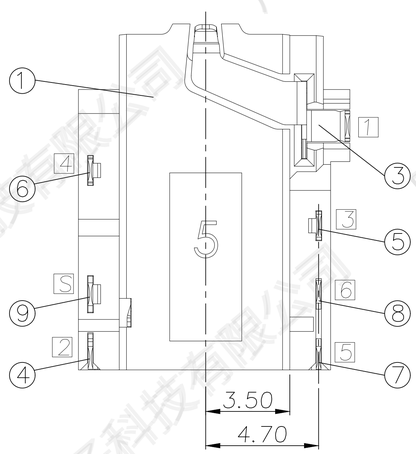

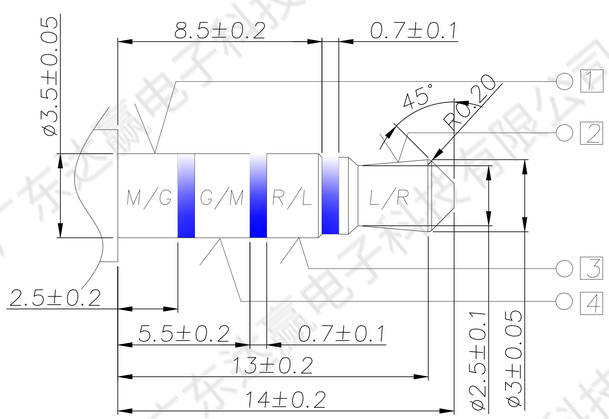

Matching Plug

NO.	DESCRIPTION	QTY	MATERIAL	REMARK
⑨	Shild shell S	1	C2680, t0.2	Nickel 50u" Min
⑧	Make terminal 6	1	C5210, 0.20t	5u" Silver, 50u" Ni underplated.
⑦	Transfer Spring 5	1	C5210, 0.20t	
⑥	Ring spring 4	1	C5210, 0.20t	Gold Flash on contact area, Plate Matte tin on solder tail, Nickel underplated.
⑤	Ring spring 3	1	C5210, 0.20t	
④	Tip spring 2	1	C5210, 0.20t	
③	Earth spring 1	1	C5210, 0.20t	
②	Separator	1	PA10T UL-94V0	Black
①	Housing	1		Black

ECN NO.	REV	DATE	DESCRIPTION	CHANGE	APPRO.
	A-0	2015.12.24	NEW	彭迪如	余 军

GENERAL TOLERANCE UNLESS OTHERWISE NOTED	
Angle	±2°
10<L≤20	±0.3
5<L≤10	±0.25
L≤5	±0.20

DESIGN	彭迪如	2015.12.24
CHECK		
APPROVAL		

SCALE: 3:1 UNIT:mm A4 SHEET:1 of 1

广东达赢电子科技有限公司
Guangdong DaYing Electronic Technology Co.,ltd.

TITLE:	ø3.5mm PHONE JACK
MODEL NO.	PJ-D3265A-ABK7AS02L-RH
FILE NO.	Q/SSY.QW-001A-0***