SPECIFICATION:

1. Electrical characteristics
   - 1-1. Current rating:DC 0.5A max.
   - 1-2:Voltage rating:DC 30V.
   - 1-3:Contact resistance:50mΩ max.
   - 1-4. Insulation resistance:100MΩ min. at 500V DC.
   - 1-5. Withstanding voltage:500V AC for 1 minute.
2. Mechanical characteristics
   - 2-1. Life test:5000 cycles min,
   - 2-2. Mating force:3～30N,
     Unmating force:2～30N.
3. Salt spray test time:48 hours min.

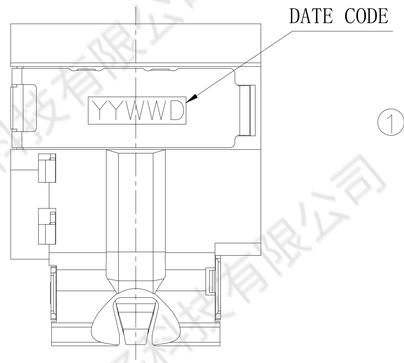

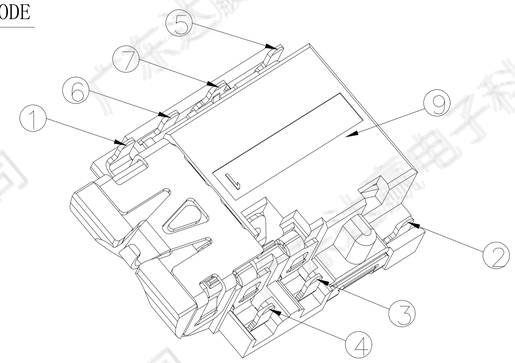

Matching Plug

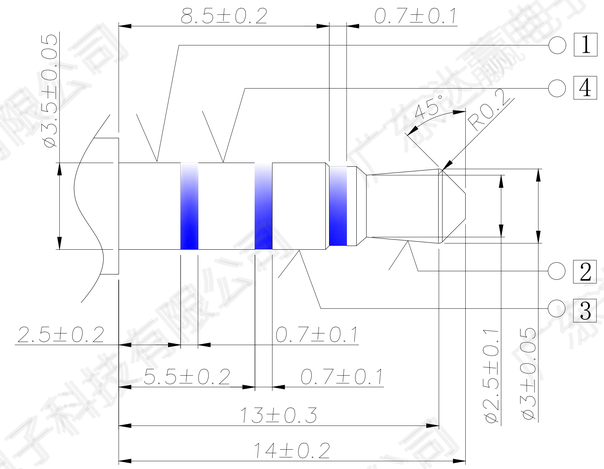

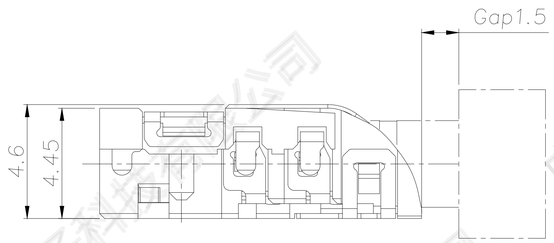

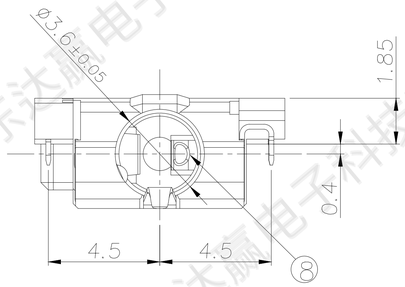

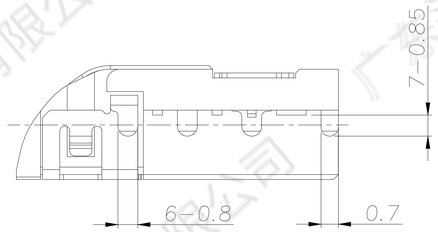

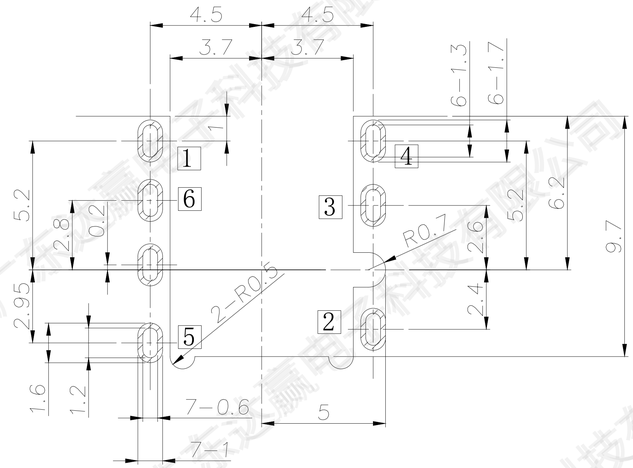

RECOMMENDED P.C.B LAYOUT(t=1.0mm)
TOP VIEW (TOLRANCE:±0.05)

MODEL NO.:

PJ-D32610 - A BK7 AS04 L - RH
(1) (2)(3) (4) (5) (6)

(1) Series no.
(2) Schematic type: A,B,C
(3) Housing color:
BK7=Black
(4) Terminal plating:
AS04=Plating Tin/Gold 5″ min.
(5) Packing mode:L=Reel packing
(6) Environmental requirements:
RH=RoHS 2.0 + Halogen Free

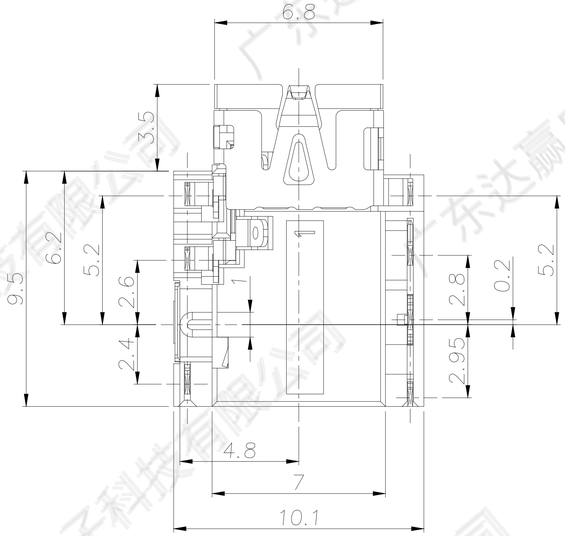

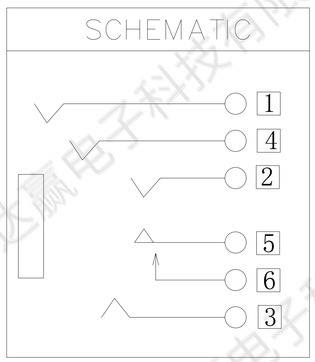

NO.	DESCRIPTION	QTY	MATERIAL	REMARK
9	Housing	1	PA10T R630NH+30%GF UL 94V-0	Black
8	Insulator	1	PA10T R630NH+30%GF UL 94V-0	Black
6	Shunt terminal 6	1	Phosphor bronze, 0.20t	Gold Flash On Contact Area Tin Plating on Solder Tail Area, All over Nickel Plated
5	Transfer Spring 5	1	Phosphor bronze, 0.20t	Gold Flash On Contact Area And Solder Tail Area, All over Nickel Plated
7	shell	1	Phosphor bronze, 0.20t	Tin Plating on Solder Tail Area, All over Nickel Plated
4	Ring spring 4	1	Phosphor bronze, 0.20t	Au5u" On Contact Area Tin Plating on Solder Tail , All over Nickel Plated
3	Ring spring 3	1	Phosphor bronze, 0.20t	
2	Tip spring 2	1	Phosphor bronze, 0.20t	
1	Earth spring 1	1	Phosphor bronze, 0.20t	Au5u" On Contact Area Gold Flash on Solder Tail. All over Nickel Plated

ECN NO.	REV	DATE	DESCRIPTION	CHANGE	APPRO.
	A-0	2015.05.21	NEW	李海鸥	余 军

GENERAL TOLERANCE UNLESS OTHERWISE NOTED	
Angle	±2°
10<L≤20	±0.3
5<L≤10	±0.25
L≤5	±0.20

DESIGN	李海鸥	2015.05.21
CHECK		
APPROVAL		

SCALE: 3:1 UNIT:mm A4 SHEET:1 of 1

广东达赢电子科技有限公司
Guangdong DaYing Electronic Technology Co.,ltd.

TITLE:	ϕ3.5mm PHONE JACK
MODEL NO.	PJ-D32610-ABK7AS04L-RH
FILE NO.	Q/SSY.QW-001A-0524