MODEL NO.:

PJ-D3261D - A BK7 AS04 L - RH

(1) (2)(3) (4) (5) (6)

(1) Series no.

(2) Schematic type: A,B,C

(3) Housing color:
BK7=Black

(4) Terminal plating:
AS04=Plating Tin/Gold 5u″ min.

(5) Packing mode:L=Reel packing

(6) Environmental requirements:
Rh=RoHS 2.0 + Halogen Free

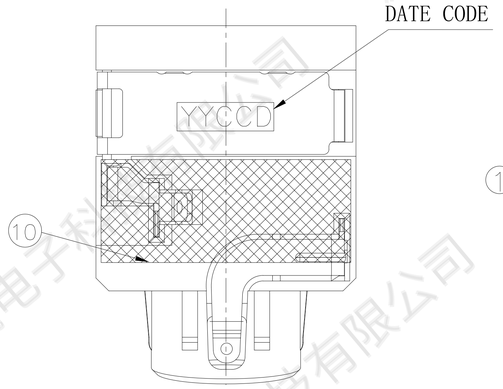

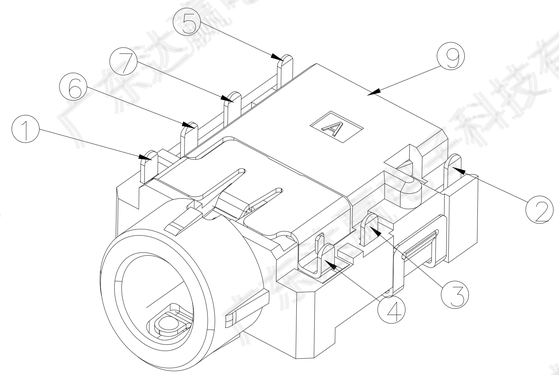

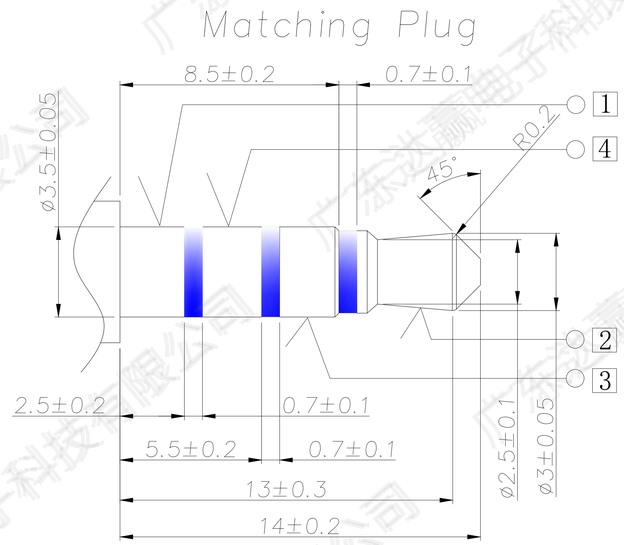

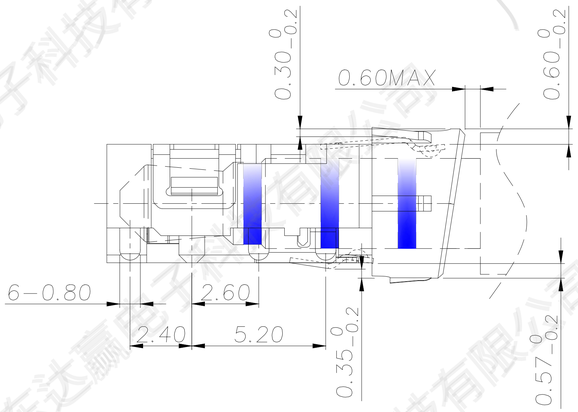

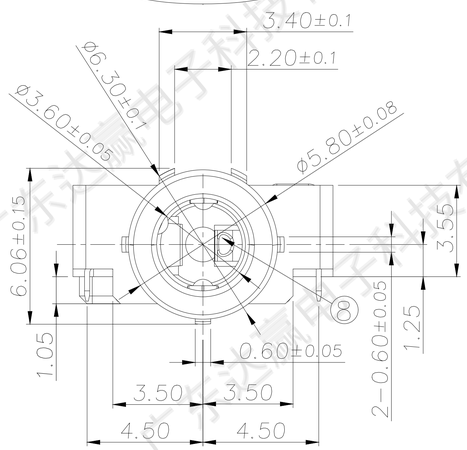

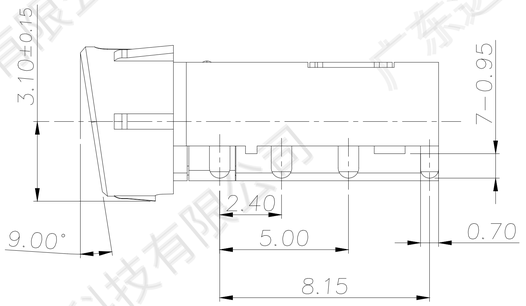

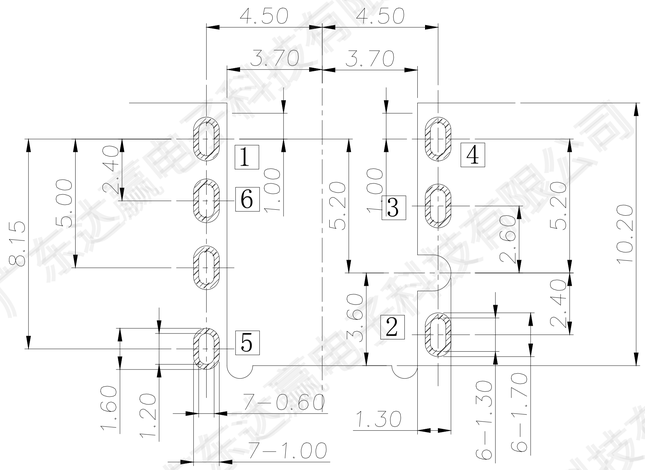

RECOMMENDED P.C.B LAYOUT
TOP VIEW (TOLRANCE:±0.05)

SPECIFICATION:

1. Electrical characteristics
   1-1. Current rating:DC 0.5A max.
   1-2:Voltage rating:DC 30V.
   1-3:Contact resistance:50mΩ max.
   1-4. Insulation resistance:100MΩ min. at 500V DC.
   1-5. Withstanding voltage:500V AC for 1 minute.
2. Mechanical characteristics
   2-1. Life test:5000 cycles min,
   2-2. Mating force:3～30N,
   Unmating force:2～30N.
3. Salt spray test time:48 hours min.

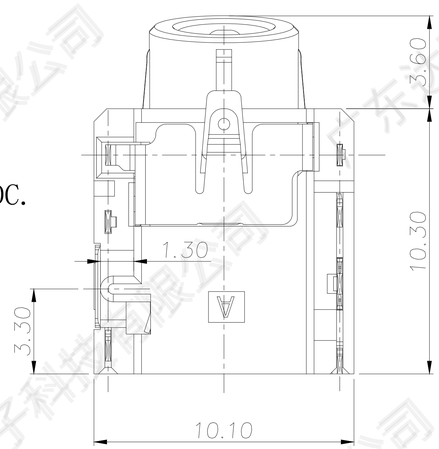

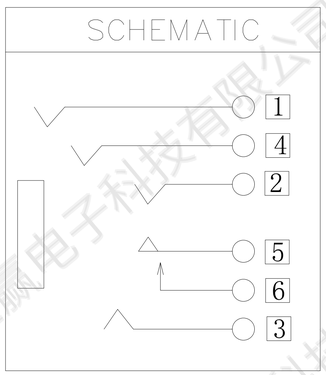

NO.	DESCRIPTION	QTY	MATERIAL	REMARK
10	Mylar	1	Kapton	Yellow
9	Housing	1	PA10T R630NH+30%GF UL 94V-0	Black
8	Insulator	1	PA10T R630NH+30%GF UL 94V-0	Black
5	Transfer Spring 5	1	Phosphor bronze, 0.20t	Gold Flash On Contact Area And Solder Tail Area, All over Nickel Plated
7	shell	1	Phosphor bronze, 0.20t	Nickel Plated.
6	Shunt terminal 6	1	Phosphor bronze, 0.20t	Au5u″ On Contact Area Tin Plating on Solder Tail Area, All over Nickel Plated
4	Ring spring 4	1	Phosphor bronze, 0.20t	
3	Ring spring 3	1	Phosphor bronze, 0.20t	
2	Tip spring 2	1	Phosphor bronze, 0.20t	
1	Earth spring 1	1	Phosphor bronze, 0.20t	

ECN NO.	REV	DATE	DESCRIPTION	CHANGE	APPRO.
	A-1	2016.11.16	客户要求，变更头部形状,外壳改镀全镍；	李海鸥	
	A-0	2016.09.19	NEW	李海鸥	

GENERAL TOLERANCE UNLESS OTHERWISE NOTED	
Angle	±2°
10<L≤20	±0.30
5<L≤10	±0.25
L≤5	±0.20

DESIGN	李海鸥	2016.11.16
CHECK		
APPROVAL		

SCALE: 3:1 UNIT:mm A4 SHEET:1 of 1

广东达赢电子科技有限公司
Guangdong DaYing Electronic Technology Co.,ltd.

TITLE:	ø3.5mm PHONE JACK
MODEL NO.	PJ-D3261D-ABK7AS04L-RH
FILE NO.	Q/SSY.QW-001A-0574

广东达赢电子科技有限公司