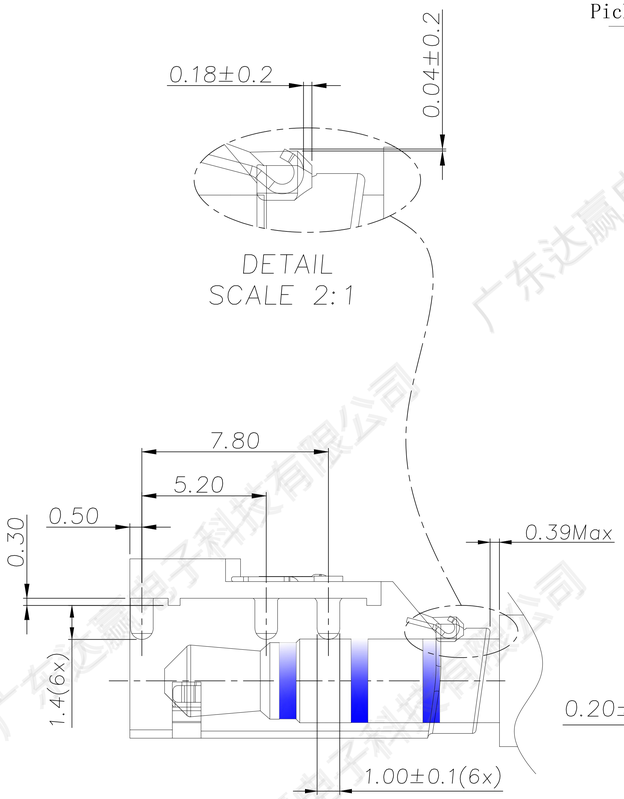

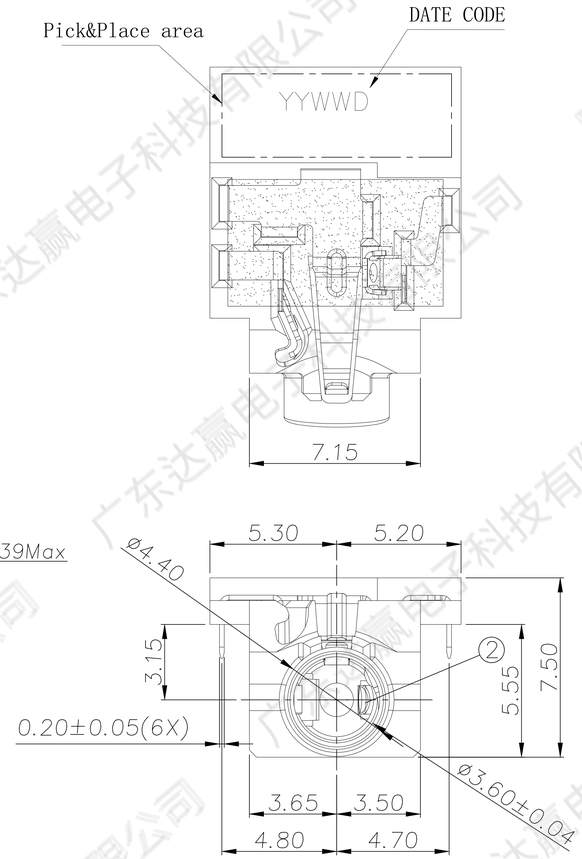

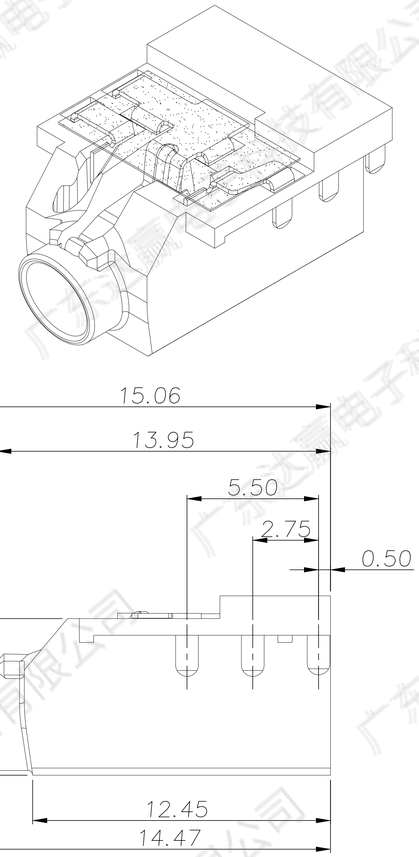

MODEL NO.:
PJ-D3266P-A BK7 AS02 L-RH
(1) (2) (3) (4) (5) (6)

(1) Series no.
(2) Schematic type: A
(3) Housing material and color:
BK7=PA10T(black)
(4) Terminal plating:
AS02=1#~4#Gold flash on contact area, 80u" Matte tin on solder tail; 5#,6# Silver plating.
(5) Packing mode: L=Reel packing
(6) Environmental requirements:
RH=RoHS & Halogen Free

SPECIFICATION:
1.Electrical characteristics
1.1.Current rating: DC 1A max.
1.2: Voltage rating: DC 12V.
1.3: Contact resistance: ≤50mΩ(Initial)
After test: ≤100mΩ
1.4.Insulation resistance:
100MΩ min. at 500V DC.
1.5.Withstanding voltage:
500V AC for 1 minute.
2.Mechanical characteristics
2.1.Mating force: 8~30N,Initial
25N Max. After The 2000th
Unmating force: 6~18N.
5N Min. After The 2000th

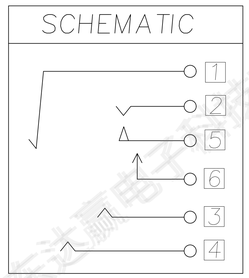

1 : Terminal No.
① : Project No.

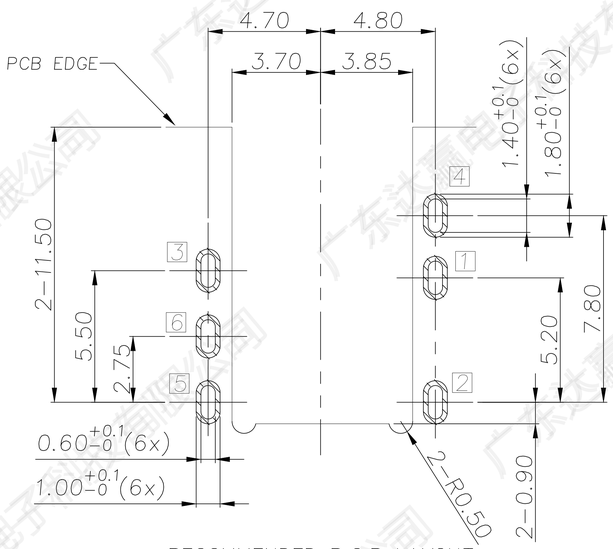

RECOMMENDED P.C.B LAYOUT
TOP VIEW (TOLRANCE: ±0.05)

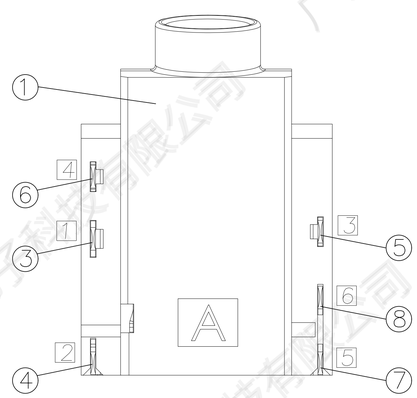

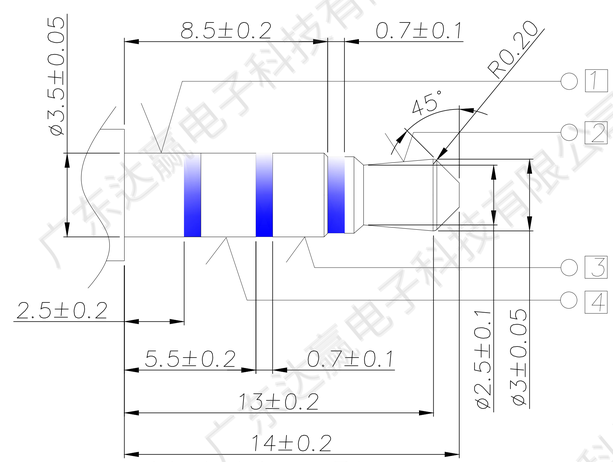

Matching Plug

NO.	DESCRIPTION	QTY	MATERIAL	REMARK
⑨	Mylar	1	POLYIMIDE FILM	YELLOW
⑧	Make terminal 6	1	C5210, 0.20t	5u" Silver, 50u" Ni underplated.
⑦	Transfer Spring 5	1	C5210, 0.20t	
⑥	Ring spring 4	1	C5210, 0.20t	Gold Flash on contact area, 80u" Matte tin on solder tail, 50u" Ni underplated.
⑤	Ring spring 3	1	C5210, 0.20t	
④	Tip spring 2	1	C5210, 0.20t	
③	Earth spring 1	1	C5210, 0.20t	
②	Separator	1	PA10T UL-94V0	Black
①	Housing	1		Black

ECN NO.	REV	DATE	DESCRIPTION	CHANGE	APPRO.
	A-1	2019.03.05	依客户要求，新增MYLAR	罗振强	刘 伟
	A-0	2018.12.13	NEW	罗振强	李海鸥

Angle	±2°	
.x	±0.30	
.xx	±0.20	
.xxx	±0.10	

GENERAL TOLERANCE UNLESS OTHERWISE NOTED

DESIGN	罗振强	2019.03.05
CHECK		
APPROVAL		
SCALE: 3:1	UNIT:mm	A4

广东达赢电子科技有限公司
Guangdong DaYing Electronic Technology Co.,ltd.

CUSTOMER DRAWING

TITLE:	Ø3.5mm PHONE JACK
MODEL NO.	PJ-D3266P-ABK7AS02L-RH
FILE NO.	Q/DY.QW-001A-xxxx

SHEET: 1 of 1

广东达赢电子科技有限公司