UP WIN

Matching Plug

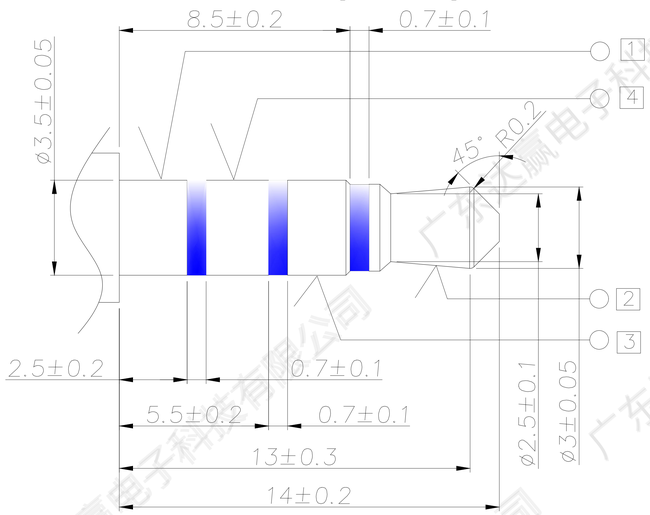

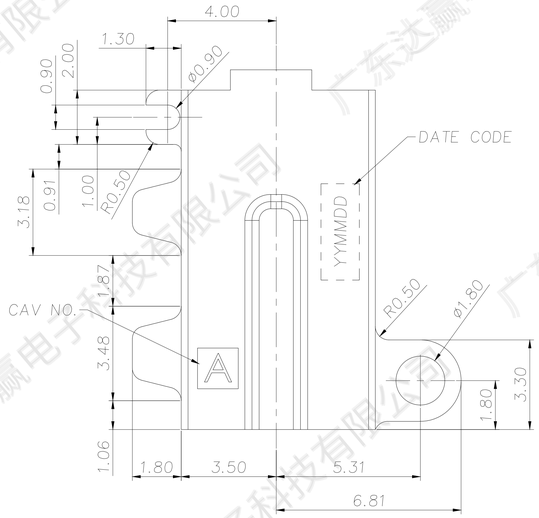

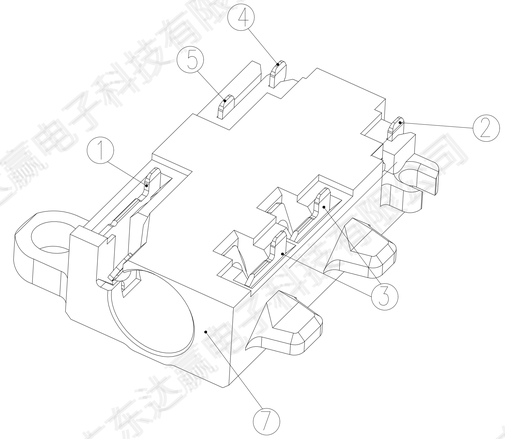

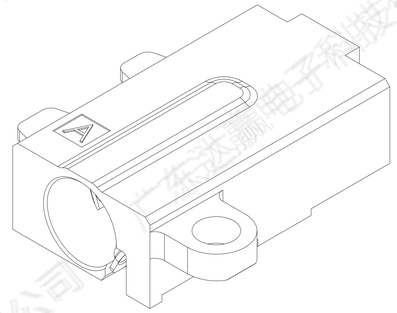

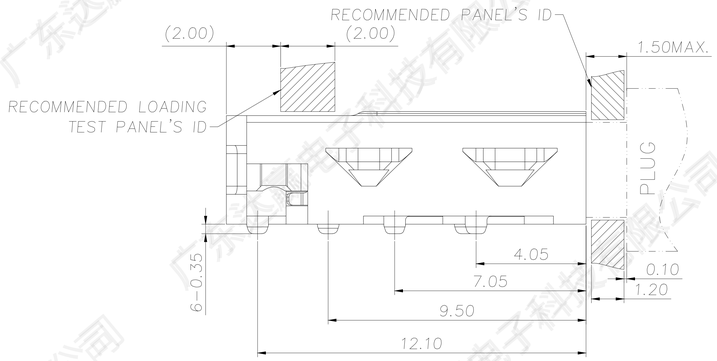

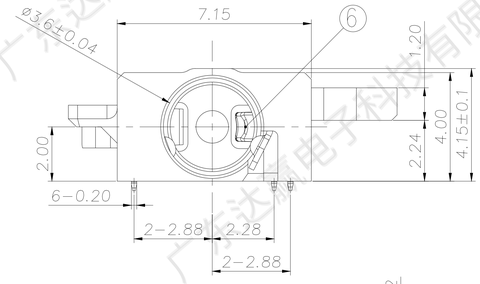

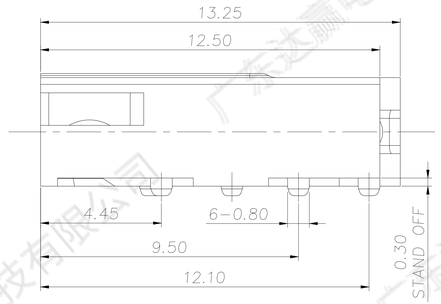

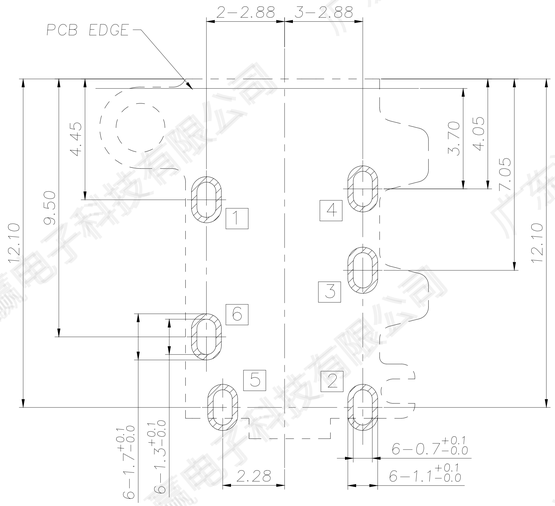

RECOMMENDED PCB LAYOUT(TOP VIEW)
(GENERAL TOLERANCE±0.05)

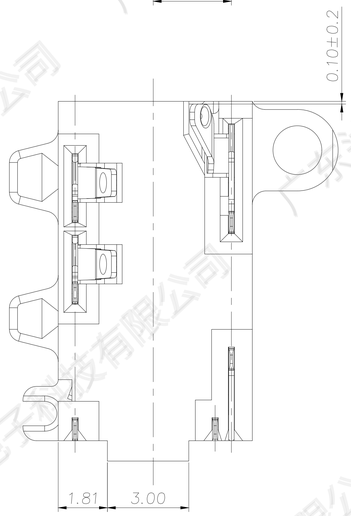

SPECIFICATION:

1.Electrical characteristics
1.1.Current rating:DC 1A
1.2:Voltage rating:DC 30V.
1.3:Contact resistance:
Initial:50mΩ max ;
After humidity test:100mΩ max.
1.4.Insulation resistance:
100MΩ min. at 500V DC.
1.5.Withstanding voltage:
500V AC for 1 minute.
2.Mechanical characteristics
2.1.Life test:2000 cycles min,
2.2.Mating force: Initial:8~30N ;
After The 2000th:25N max.
Unmating force:
Initial:6-18N ;
After The 2000th:5N min.

SCHEMATIC

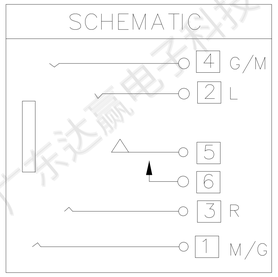

NO.	DESCRIPTION	QTY	MATERIAL	REMARK
7	Housing	1	PA10T R630NH UL 94-V0	Black
6	Insulator	1		
5	Shunt terminal 6	1	C5210-EH, 0.20t	Gold 3u" on contact; Gold flash on solder tail area; All over 50u" Nickel underplated.
4	Transfer spring 5	1	C5210-EH, 0.20t	
3	Ring spring 3 4	1	C5191R-H, 0.20t	
2	Tip spring 2	1	C5210-EH, 0.20t	
1	Earth spring 1	1	C5191R-H, 0.20t	

ECN NO.	REV	DATE	DESCRIPTION	CHANGE	APPRO.
	A-1	2022.01.04	NEW	刘伟	余军

GENERAL TOLERANCE UNLESS OTHERWISE NOTED	
Angle	±2°
.x	±0.30
.xx	±0.20
.xxx	±0.10

DESIGN	刘伟	2021.02.02
CHECK		
APPROVAL		

SCALE: 3:1 UNIT:mm A4 SHEET:1 of 1

广东达赢电子科技有限公司
Guangdong Daying Electronics Technology Co.,ltd.

TITLE:	ø3.5mm PHONE JACK
MODEL NO.	PJ-D3291M-ABK7AU03L-RH
FILE NO.	Q/DY.QW-001A-0762

原始设计：刘伟 承认：YUJUN 日期：2020.09.01

UP WIN

广东达赢电子科技有限公司