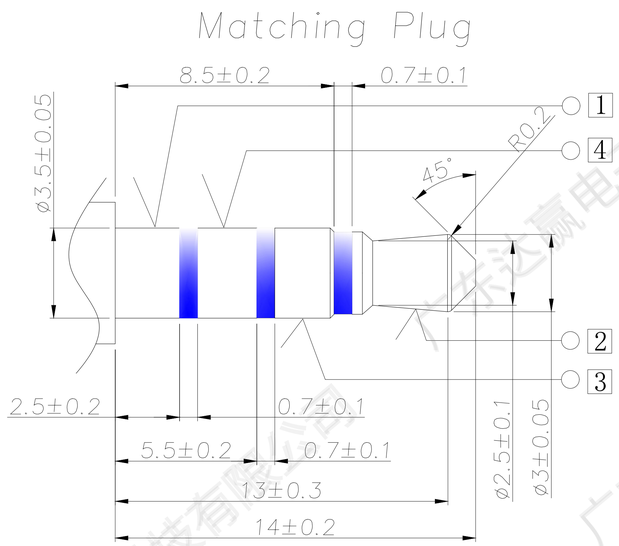

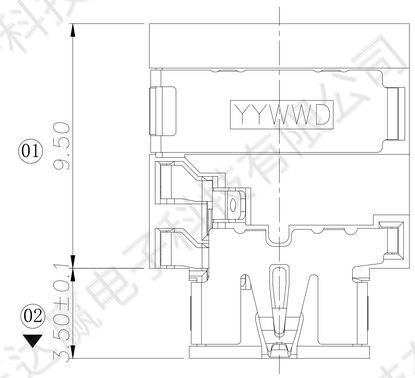

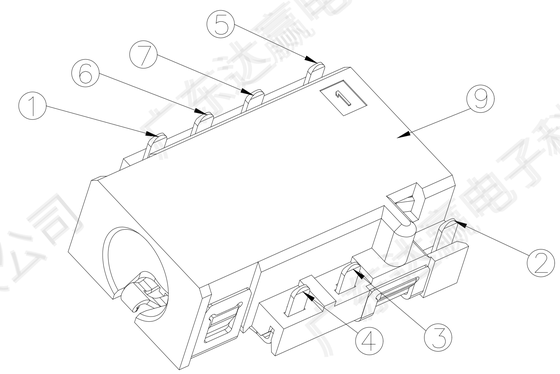

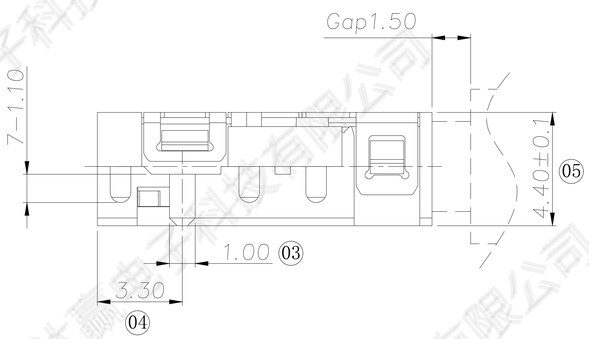

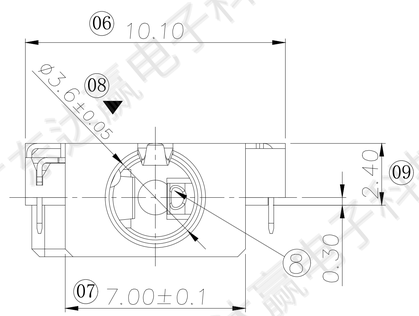

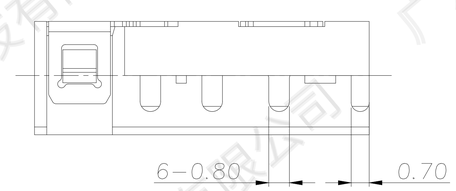

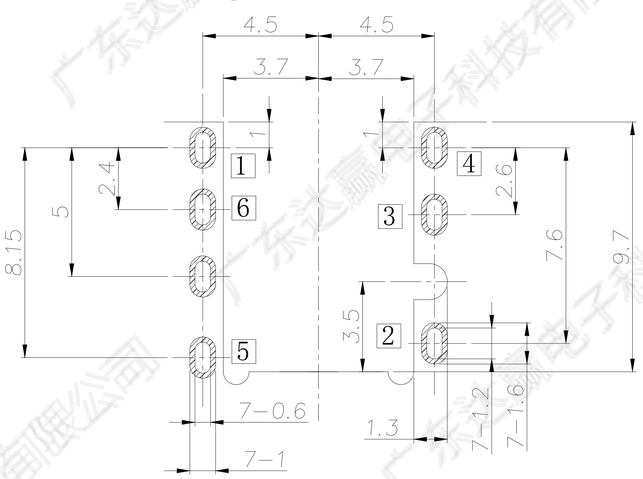

RECOMMENDED P.C.B LAYOUT
TOP VIEW (TOLRANCE:±0.05)

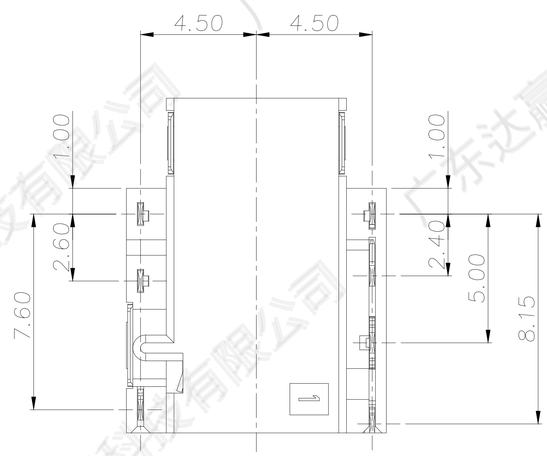

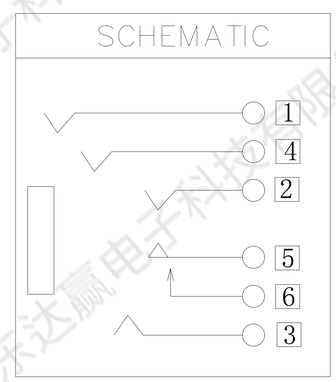

NOTES(注释)：

1.ELECTRICAL CHARACTERISTICS(电气特性)：

1-1.CURRENT RATING:DC 0.5A;(额定电流：DC 0.5A)

1-2.VOLTAGE RATING:DC 30V;(额定电压：DC 30V)

1-3.CONTACT RESISTANCE：30mΩ MAX;(接触阻抗：30mΩ MAX)

1-4.INSULATION RESISTANCE：100MΩ MIN.AT 500V DC;(绝缘阻抗：100MΩ MIN.，500V DC)

1-5.WITHSTANDING VOLTAGE:500V AC FOR 1MINUTE;(耐压：500V AC，1分钟)

2.MECHANICAL CHARACTERISTICS(机械特性)

2-1.LIFE TEST:5,000 CYCLES MIN.,FREQUENCY:500 CYCLES FOR 1 HOUR:(寿命测试：5.000次MIN.频率：500次/小时)

2-2.MATING FORCE:0.3～3.0Kgf,UNMATING FORCE:0.3～3.0Kgf;(插入力0.3～3.0Kgt.，拔出：0.3～3.0Kgf)

3.DURABILITY AFTER TEST:CONTACT RESISTANCE(PER PIN)CHANGE FROM INITIAL VALUE：20mΩ MAX，MATING&UNMATING FORCE MEET THE REQUEST,NO DISTORTION,SPLIT,CURLING ETC. APPEARANCE DEFECT:
(寿命测试后，每单PIN接触阻抗与初始值的变化量最大不超过20mΩ，插拔力需符合要求且端子天变形，断裂，卷曲等现象)

4.SALT SPRAY TEST TIME:24 HOURS MIN (盐雾测试时间最少24小时)

5.THE DIMENSION MARKED"▼"MUST BE RECORDED,THE DIMENSIONS MARKED "▼"SHALL BE CHECKED;
(标示"▼"的尺寸必须记录实际检验数据，标注"▼"的尺寸重点确认)

6.HARMFUL MATERIAL AND PROCESS CONTROL. PLEASE FOLLOW DOC. NO."QW-Q-043".
(本产品使用原物料及制程必须符合:Qw-Q-043文件环境管理物质相关规定)

NO.	DESCRIPTION	QTY	MATERIAL	REMARK
9	Housing	1	HIGH TEMPERATURE PLASTIC	Black
8	Insulator	1	HIGH TEMPERATURE PLASTIC	Black
5	Transfer Spring 5	1	Phosphor bronze, 0.20t	Gold Flash On Contact Area And Solder Tail Area, All over Nickel Plated
7	shell	1	Phosphor bronze, 0.20t	Plating Ni .
6	Shunt terminal 6	1	Phosphor bronze, 0.20t	Gold Flash On Contact Area Tin Plating on Solder Tail Area , All over Nickel Plated
2	Tip spring 2	1	Phosphor bronze, 0.20t	
4	Ring spring 4	1	Phosphor bronze, 0.20t	Gold Flash On Contact Area And Solder Tail Area, All over Nickel Plated
3	Ring spring 3	1	Phosphor bronze, 0.20t	
1	Earth spring 1	1	Phosphor bronze, 0.20t	

ECN NO.	REV	DATE	DESCRIPTION	CHANGE	APPRO.	GENERAL TOLERANCE UNLESS OTHERWISE NOTED	
	A-4	2022.05.19	优化图面规格描述与客户图面一致	罗振强	余 军	Angle	±2°
	A-3	2019.08.15	变更1#、3#、4#端子电镀要求	罗振强	刘 伟	10<L≤20	±0.30
	A-2	2019.07.15	规范电镀盐雾要求	罗振强	刘 伟	5<L≤10	±0.25
	A-1	2019.06.05	变更喷码格式为YYWWD（年周日），方便追溯	罗振强	刘 伟	L≤5	±0.20

DESIGN	罗振强	2022.05.19
CHECK		
APPROVAL		

SCALE: 3:1 UNIT:mm A4

广东达赢电子科技有限公司
Guangdong DaYing Electronic Technology Co.,ltd.

CUSTOMER DRAWING

TITLE:	ø3.5mm PHONE JACK
MODEL NO.	PJ-D3261A-ABK7AS02L-RH
FILE NO.	Q/SSY.QW-001A-0778

SHEET:1 of 1

广东达赢电子科技有限公司