MODEL NO.:
PJ-D3145C-ABK7AS02L-RH
(1) (2) (3) (4)(5) (6)
(1) Series no.
(2) Schematic type: A
(3) Housing color:
BK7=Black
(4) Terminal plating:
AS02=Plating Tin/Gold 1u″ min.
(5) Packing mode:L=Reel packing
(6) Environmental requirements:
RH=RoHS 2.0＋Halogen Free

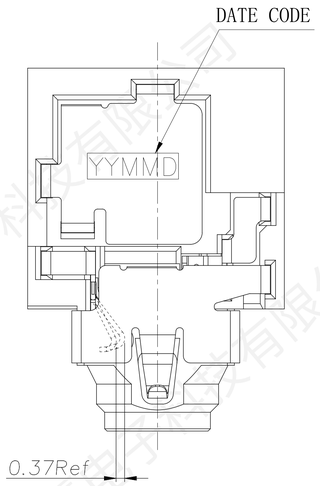

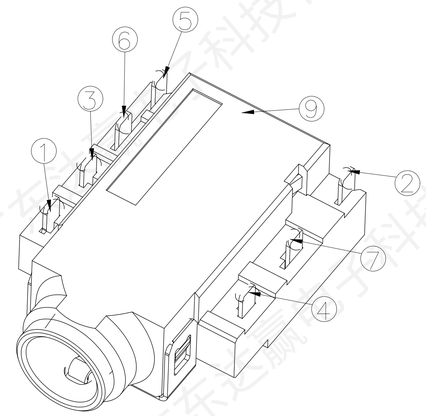

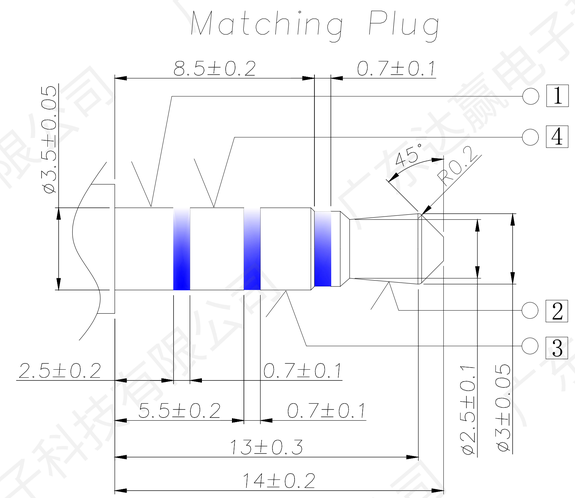

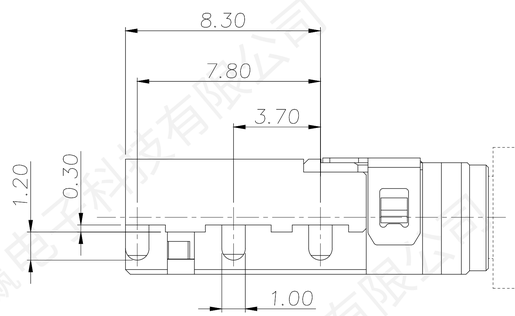

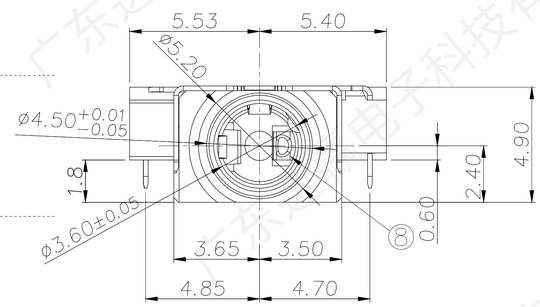

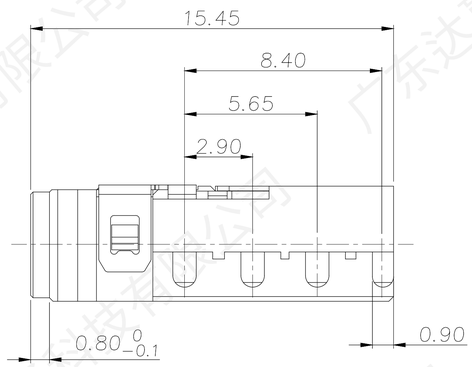

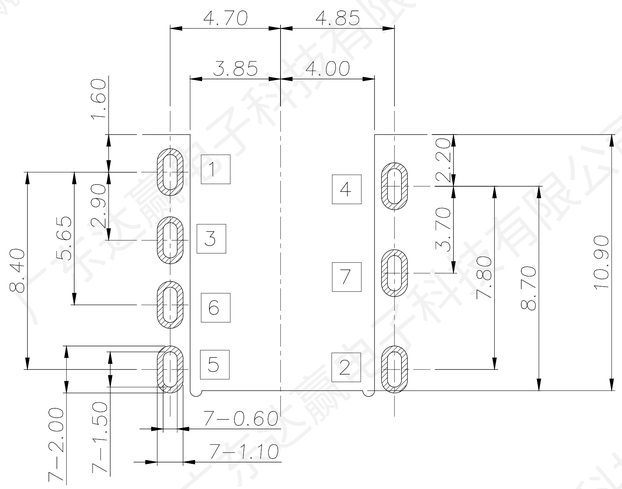

RECOMMENDED P.C.B LAYOUT(t=1.0mm)
TOP VIEW (TOLRANCE:±0.05)

SPECIFICATION:
1.Electrical characteristics
1-1.Current rating:DC 0.5A max.
1-2:Voltage rating:DC 30V.
1-3:Contact resistance:50mΩ max.
1-4.Insulation resistance:100MΩ min. at 500V DC.
1-5.Withstanding voltage:500V AC for 1 minute.
2.Mechanical characteristics
2-1.Life test:5000 cycles min,
2-2.Mating force:3～30N,
Unmating force:3～30N.

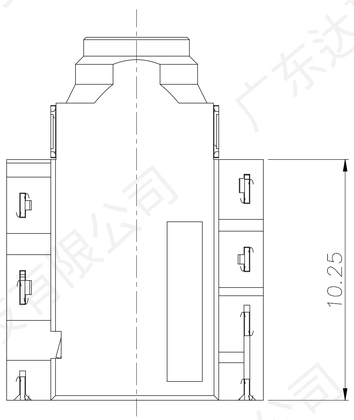

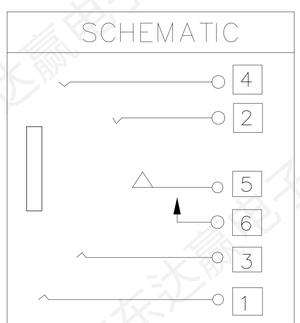

NO.	DESCRIPTION	QTY	MATERIAL	REMARK
9	Housing	1	HIGH TEMPERATURE PLASTIC	Black
8	Insulator	1	HIGH TEMPERATURE PLASTIC	Black
6	Shunt terminal [6]	1	Phosphor bronze, 0.20t	Gold Flash On Contact And Solder Tail Area, 50u″ Nickel UnderPlated
5	Transfer Spring [5]	1	Phosphor bronze, 0.20t	
7	Shell	1	Phosphor bronze, 0.20t	Gold Flash On Contact Area 100u″ Matte-Tin Plating on Solder Tail Area, 50u″ Nickel UnderPlated
4	Ring spring [4]	1	Phosphor bronze, 0.20t	
3	Ring spring [3]	1	Phosphor bronze, 0.20t	
2	Tip spring [2]	1	Phosphor bronze, 0.20t	
1	Earth spring [1]	1	Phosphor bronze, 0.20t	

ECN NO.	REV	DATE	DESCRIPTION	CHANGE	APPRO.
	A-1	2015.07.02	客户要求，变更头部结构.	李海鸥	余 军
	A-0	2015.05.07	NEW	李海鸥	余 军

GENERAL TOLERANCE UNLESS OTHERWISE NOTED	
Angle	±2°
.x	±0.30
.xx	±0.25
.xxx	±0.10

DESIGN	李海鸥	2015.07.02
CHECK		
APPROVAL		

SCALE: 3:1 UNIT:mm A4 SHEET:1 of 1

广东达赢电子科技有限公司
Guangdong DaYing Electronic Technology Co.,ltd.

TITLE:	ø3.5mm PHONE JACK
MODEL NO.	PJ-D3145C-ABK7AS02L-RH
FILE NO.	Q/SSY.QW-001A-xxxx

广东达赢电子科技有限公司